CATALOG NUMBER	CONDUCTOR RANGE (MIN. - MAX.)	ACSR CONDUCTOR (MIN. - MAX.)	DIM A	DIM B	DIM C	DIM D	DIM E	DIM F	APPROX. WT. EACH LB. [KG]	STANDARD PACK
GH282AL	.250 - .563 [6.40 - 14.30]	4 - 4/0	5.250 [133.35]	3.500 [88.90]	4.500 [114.30]	1.750 [44.45]	.250 [6.35]	45°	.640 [.29]	25
GH284AL	.398 - .806 [10.10 - 20.50]	1/0 - 397.5 MCM	6.000 [152.40]	4.000 [101.60]	5.500 [139.70]	2.438 [61.93]	.375 [9.53]	45°	1.160 [.53]	25
GH286AL	.563 - 1.081 [14.30 - 27.40]	4/0 - 795 MCM	6.500 [165.10]	4.375 [111.13]	5.500 [139.70]	2.438 [61.93]	.375 [9.53]	45°	1.320 [.60]	25

ITEM	DESCRIPTION	MATERIAL
1	BODY	ALUMINUM
2	PAD	ALUMINUM
3	EYESTEM	STAINLESS STEEL
4	STIRRUP	COPPER

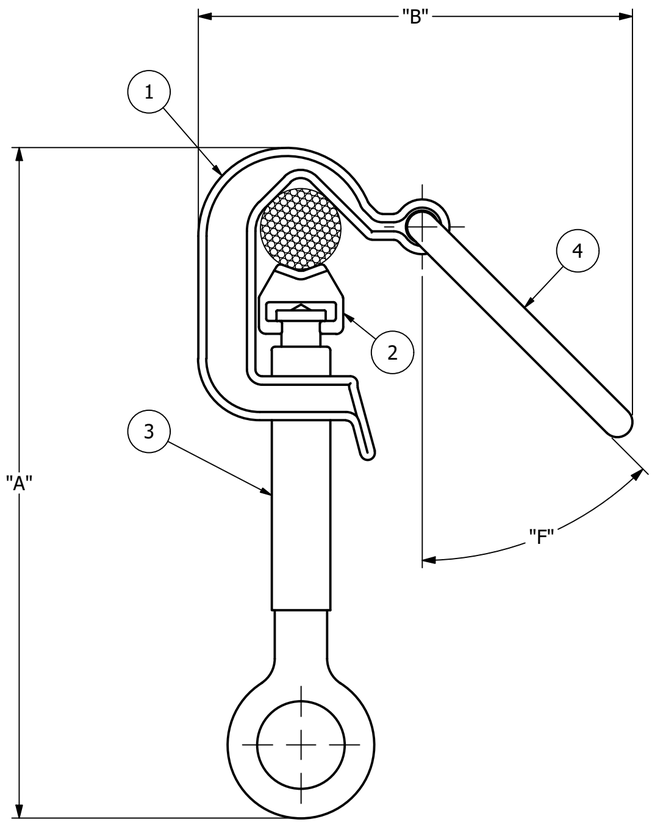

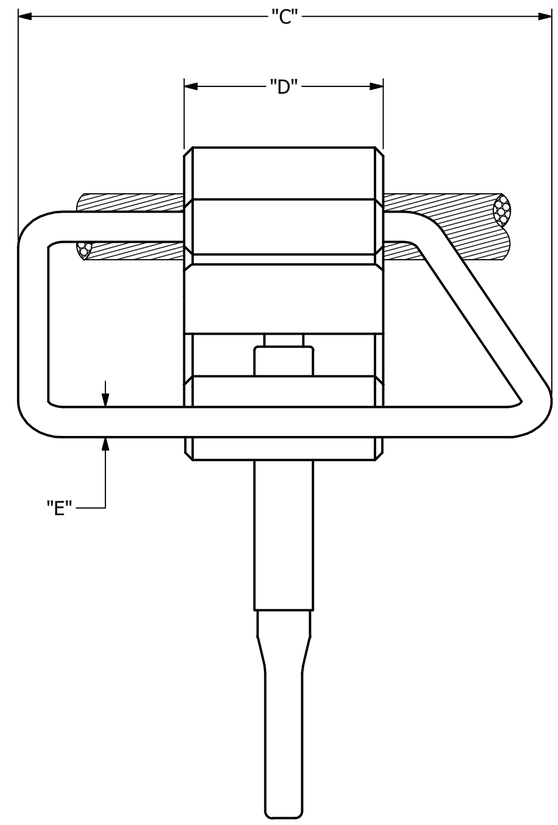

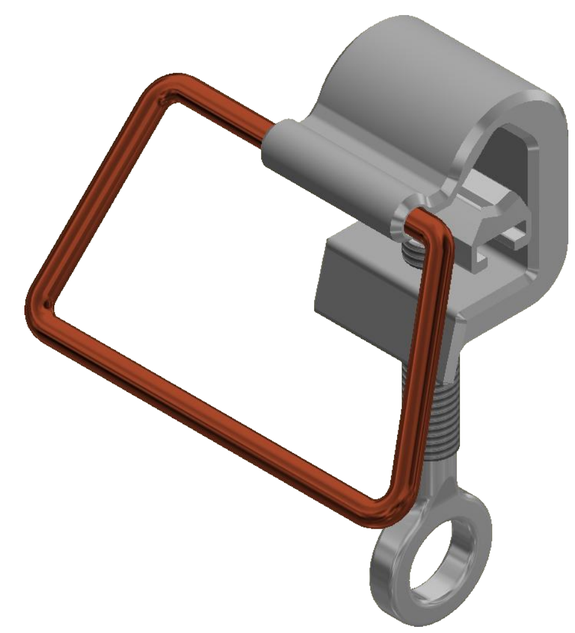

NOTES:

1. ALL DIMENSIONS FOR REFERENCE ONLY. DISTANCE IN. [MM], FORCE LBS. [kN], TORQUE IN. LBS. [N.m], & WEIGHT LBS. [KG]
2. RATINGS:
   A. RECOMMENDED TORQUE: EYESTEM - 200 IN.LBS [22.6]
3. CERTIFICATIONS, SPECIFICATIONS, & STANDARDS:
   A. ANSI C119.4
4. SUFFIXES & VARIANT CONFIGURATION:
   A SUFFIX IS ADDED TO THE CATALOG NUMBER TO DESIGNATE THE REQUIRED FITTINGS AS SHOWN IN THE TABULATION (EXAMPLE: GH282ALP):
   "L" - FACTORY INHIBITED AND BAGGED
   "P" - TIN PLATED BAIL

EC #	DATE	CHANGED BY	CHECKED BY	APPROVED BY
210423007506	04/23/21	MK	SI	SD

WEIGHT, LBS: SEE TABLE

DESCRIPTION:
EYESTEM MATERIAL UPDATED
SUFFIX NOTES UPDATED
DRAWING TEMPLATE UPDATED
--
--
ADDITIONAL COMMENTS: --

THIRD ANGLE PROJECTION

CONFIDENTIAL:
THIS DRAWING AND ITS CONTENTS ARE CONFIDENTIAL AND THE EXCLUSIVE PROPERTY OF HUBBELL POWER SYSTEMS. NO PUBLICATION, DISTRIBUTION OR COPIES MAY BE MADE WITHOUT THE WRITTEN CONSENT OF HUBBELL POWER SYSTEMS. HUBBELL POWER SYSTEMS UNPUBLISHED ALL RIGHTS RESERVED UNDER THE COPYRIGHT LAWS

HUBBELL POWER SYSTEMS, Inc.

TITLE
CONNECTOR, HOT LINE
AL STIRRUP, TYPE GH28XX

CATALOG NUMBER: SEE TABLE

SIZE	DWG NO.	PART / ASSY NO.	REV
C	CC-25764	SEE TABLE	01

SCALE: 1 : 1 | DRN BY: SD | DATE: 10/23/18 | SHEET 1 OF 1